Analysing and Designing To-Be Process Modelling

Mark Le

Executive Summary

This project analyses and redesigns the business processes of Swinburne Guru Consulting (SGC), a coaching services organisation experiencing operational inefficiencies and service delays.

Key issues identified include:

- Manual client onboarding and data handling
- Scheduling delays due to fragmented communication
- Process bottlenecks caused by feedback dependencies
- Late payment cycles impacting cash flow

To address these challenges, the process was redesigned using Business Process Management (BPM) principles and BPMN modelling.

The proposed To-Be solution introduces:

- Online client intake to eliminate manual data entry
- Pre-defined coach availability to streamline scheduling
- Early-stage payment processing to improve cash flow
- Automated feedback handling to remove process delays

These improvements reduce unnecessary handoffs, eliminate rework loops, and improve overall process efficiency.

BPMN models were developed to visualise both the current (As-Is) and improved (To-Be) processes, supported by an automation strategy leveraging RPA and BPMS for scalable implementation.

The redesigned process enables faster assignment completion, reduced manual workload, and improved client experience, providing SGC with a scalable foundation for future growth.

1. Introduction

Swinburne Guru Consulting (SGC) relies on a multi-step process to manage client onboarding, coach assignment, scheduling, and payment. However, the current process contains inefficiencies that lead to delays, rework, and increased manual workload.
This project focuses on analysing SGC's existing operations and redesigning the process to improve efficiency, reduce bottlenecks, and enhance client experience.
Using Business Process Management (BPM) and BPMN modelling, the project identifies key process issues, develops an improved To-Be workflow, and outlines opportunities for automation to support scalable operations.

2. Business Process Improvement Recommendation

2.1. Analysis of Current Issues

The current issues that SGC are facing are as follows:

- Process involves collecting client information manually
- Invoice payment takes too long to process and can be delayed
- Assignment completion is reliant on client feedback
- Coaching scheduling slows down the whole process if there insufficient time slots provided by the coach

2.2. Proposed Solutions for Business Process Improvement

1) **Client sends form to pick coach:** The process of collecting client information takes too long as it requires a staff member to manually input and check the client information if they are new, and/or the staff has to check that if the client is an existing member already within their database. The proposed solution is that the client is given an online form to fill out themselves which can be sent to the coaching specialist to begin searching for suitable coaches. As shown in Appendix 1, Section 1.

2) **Client pays for Assignment after verification:** Payment is currently delayed as it is at the end of the assignment process where the company and coach have to wait on the client to send through the payment invoice which can potentially lead to blacklisting, which can extend the payment process of up to a couple of months. The proposed solution is to move the payment process (Invoicing) to immediately after verification of assignment rather than at the end of the whole assignment process. As shown in

Appendix 1, Section 2.

3) **Fixing Loop in client feedback:** SGC currently has a loop with the client feedback, If the client does not submit the feedback then it will keep sending a reminder to the client until they send it. The proposed solution is that if the client does not send feedback then after 2 days the process will produce a blank feedback and finish the assignment. As shown in Appendix 1, Section 3.

4) **Coach Submits monthly Schedule:** The current process involves SGC to contact the coach to check for availability for each schedule/assignment assigned to them. The proposed solution is for the coaches to provide a monthly schedule which can be checked with the database rather than having to contact the coach for each assignment. Build and maintain a pre-qualified coach pool where coaches are vetted and onboarded ahead of time based on various skill sets, availability, and experience. As shown in Appendix 1, Section 4.

2.3 Justification for Recommendations

The recommendations have been provided to streamline the process flow reducing the time it takes to complete the whole assignment, Reduce errors when filling out client information and repetitive manual database checking, automation of sending out feedback and getting unresponsive clients, and reducing back and forth contact between company and coaches.

1) **Client sends form to pick coach:** Overall these recommendations can improve the client and coach relationship satisfaction. Allows for clearer and more accurate communication of client information between client and company. Reduces any sort of human error or miscommunication.

2) **Client pays for Assignment after verification:** Recommendations can reduce the overall time it takes for the assignment creation and completion. By moving the invoicing to after the verification, you only need to invoice for assignments that are going to go through, thereby minimising administrative work related to follow-ups and adjustments such as blacklisting (completely removing it).

3) **Fixing Loop in client feedback:** Feedback recommendations can also reduce the overall time as the company is no longer waiting for the client to send feedback to complete the whole assignment process. We can automate the feedback so the company does not have to keep monitoring for feedback if any is sent. If no feedback is sent then the assignment will just create a blank document. Resources can be directed toward clients who are engaged and willing to provide feedback, maximising the value of client interactions which in turn improves the company efficiency and effectiveness.

4) **Coach Submits monthly Schedule:** Turn around times between each assignment can be reduced as the company no longer needs to check individually for each assignment schedule timing as they have a list of all the coach's free times. Coaches can be more aware of assignment commitments when providing a monthly schedule as they need to think ahead, reducing cancellations from the coaches end.

3. Best Practices Application

3.1. Issue Overview

SGC current as-is Models present unnecessary processes such as: Back and forth communication between client, company and coach, Redundant tasks (ie. Blacklisting, individual scheduling for coaches, etc), Human errors and Unnecessary task/time delays. The aim is to use industry best practices to help improve the efficiency and effectiveness of the business in terms of customer to company relations, reducing the time for assignment completion, reducing human errors and repetitive communication, and automating any unnecessary processes.

3.2. Best Practices Applied

Each best practice has been applied to our to-be models to help improve process flow.

1. **Client Sends Form to Pick Coach:** Client fills out the form online and submits it. Coaching specialist can immediately begin finding a coach based on the information.
    - **Control Relocation** - The task takes up too much time for both client and company as the company currently needs to input all information manually based on what the client verbally tells the company. Rather than having the company contact the client over the phone the client can be sent an online form that they can fill out in their own time.
    - **Contact Reduction** - The task requires the company to contact the client which can be time consuming and redundant if the client is unavailable/unable to be contacted. Reducing the amount of times the company needs to contact the client reduces time spent speaking to the client and allows for multiple entries to be done at the same time (ie. Can contact multiple clients at the same time by sending out multiple forms). If the client is unable to complete the form when it is sent they can choose to do it in their own time allowing for flexibility for the client.
    - **Synchronous/asynchronous communication** - Reduce time taken when contacting the client. It will be faster for the company and client to allow for a form to be completed at any time rather than at a time when both the company and client is available to speak. Both contact reduction and

Synchronous/asynchronous communication can be combined.

2. **Client Pays for Assignment After Verification:** Feedback reminders are automated. The system automatically sends out feedback requests and reminders after an assignment is complete.
    - **Activity Elimination** - The 'Blacklist' task can be eliminated as the assignment cannot be started until some sort of payment has come through saving the company having to send multiple reminders and escalation to company managers about unpaid clients. This will reduce assignment completion by months depending if the client does not pay at the end of the coaching assignment.
    - **Prioritisation** - The task allows for the company to prioritise clients who pay first. Any clients who have not paid yet can be ignored until payment has gone through. This will improve the time it takes for the whole assignment to be completed as we can start processing coaching information as soon as payment has come through.
    - **Re-sequencing** - The task is re-sequenced from the end of the assignment to the start after assignment has been verified with the valid information from the client. Both eliminating and re-sequencing the task allows largely reduced times for assignment completion.

3. **Fix the Loop in Collecting Feedback:** Feedback reminders are automated. The system automatically sends out feedback requests and reminders after an assignment is complete.
    - **Activity Elimination** - The task originally had the feedback of the client be a dependency for the competition of the whole assignment. The sub-process would keep looping until it got feedback from the client. We can eliminate this by having the system create a blank document if the client does not send feedback, which then pushes the assignment to finish with a blank document reducing the overall time for completion.

4. **Coach Submits Monthly Schedule:** Coaches submit monthly availability schedules. Scheduling system uses this data without needing to check availability for each assignment.
    - **Activity Elimination** - We can eliminate the company and coach communication by having the coach submit a monthly schedule to the company. This reduces the time it takes the company to set up an appointment between client and coach as the company has a general idea on when a coach is available and can book multiple appointments based on the listed schedule.
    - **Knockout** - The company can eliminate assignments earlier if a coach is available or not during the specified time of the client. Reducing the overall time it takes for

the company to then find either a new coach or a rescheduled time and day for the both. This also reduces the time for coach recruitment if a new coach is needed.

- **Outsourcing** - The company outsources part of the scheduling tasks to the coaches to allow the coaches to think ahead of schedule of when they are available to make appointments. This process will then also be more accurate as there will be less cancellations from the coach/company side and puts the customer relationship first.

3.3. Advantages and Disadvantages of Each Practice

Advantages:

1. **Client Sends Form to Pick Coach:**
   - Reduces time spent on input validation
   - Faster coach matching
   - Improved accuracy
2. **Client Pays for Assignment After Verification:**
   - Improved cash flow
   - Reduced administrative burden in following up on unpaid invoices
   - No need for a blacklist
3. **Fix the Loop in Collecting Feedback:**
   - Reduced manual intervention
   - Faster feedback collection
   - Improved efficiency
4. **Coach Submits Monthly Schedule:**
   - This eliminates the need to advertise for every individual assignment and saves time.
   - It also ensures that coaches are readily available, reducing client wait times

Disadvantages:

1. **Client Sends Form to Pick Coach:**
   Clients may require guidance in filling out forms properly, increasing support queries.
2. **Client Pays for Assignment After Verification:**
   Some clients may resist paying upfront before the service is delivered.
3. **Fix the Loop in Collecting Feedback:**
   Automated reminders may be ignored by some clients, requiring additional manual follow-up.
4. **Coach Submits Monthly Schedule:**
   Requires regular maintenance of the coach database to ensure information is up to date.

3.4. Feasibility of Implementing Best Practices

Operational Implementations:

The best practices provided are practical and align with SGC's goals of improving efficiency and client satisfaction. The existing team can support the new processes with some training and adjustments.

A centralised management system can be adopted to facilitate scheduling, feedback collection, and payment processing. Development of standardised templates (for both client feedback and coaches schedule availability) is straightforward and requires minimal technical resources.

Initial costs for implementing new software and training may be required, but the long-term benefits in operational efficiency and client retention are likely to outweigh these costs.

Improved cash flow from advance payments will help offset any implementation costs of new training or recruitment of more staff.

Resource Implementations:

Training Staff: Allocate time for training sessions on new processes and software for all employees, especially receptionists, coaching specialists, and client relations officers/managers.

Coaches: Ensure coaches understand the importance of submitting availability schedules and the feedback process as the company has essentially outsourced most of their availability scheduling to coaches essentially.

Software Solutions: Invest in a centralised client management system that can support:

- Assignment tracking
- Client and Coach Scheduling
- Payment processing
- Feedback collection

Templates and Documents: Create templates for:

- Client coaching request forms
- Coach availability schedule submissions
- Default feedback documents

Implementation Timeline: Develop a timeline for the rollout of these changes, including phases for training, system setup, and monitoring.

Financial Resources:

- **Budget for Software**: Determining costs for purchasing or subscribing to necessary software needed.
- **Training Costs**: Expenses related to training sessions (potentially hiring external trainers if needed).

Change Management: Develop a change management plan to address employee concerns, ensuring clear communication about the benefits of the changes being implemented to help improve the company process.

4. Process Modelling

4.1. Level 2 AS-IS BPMN Diagrams

Main Process:

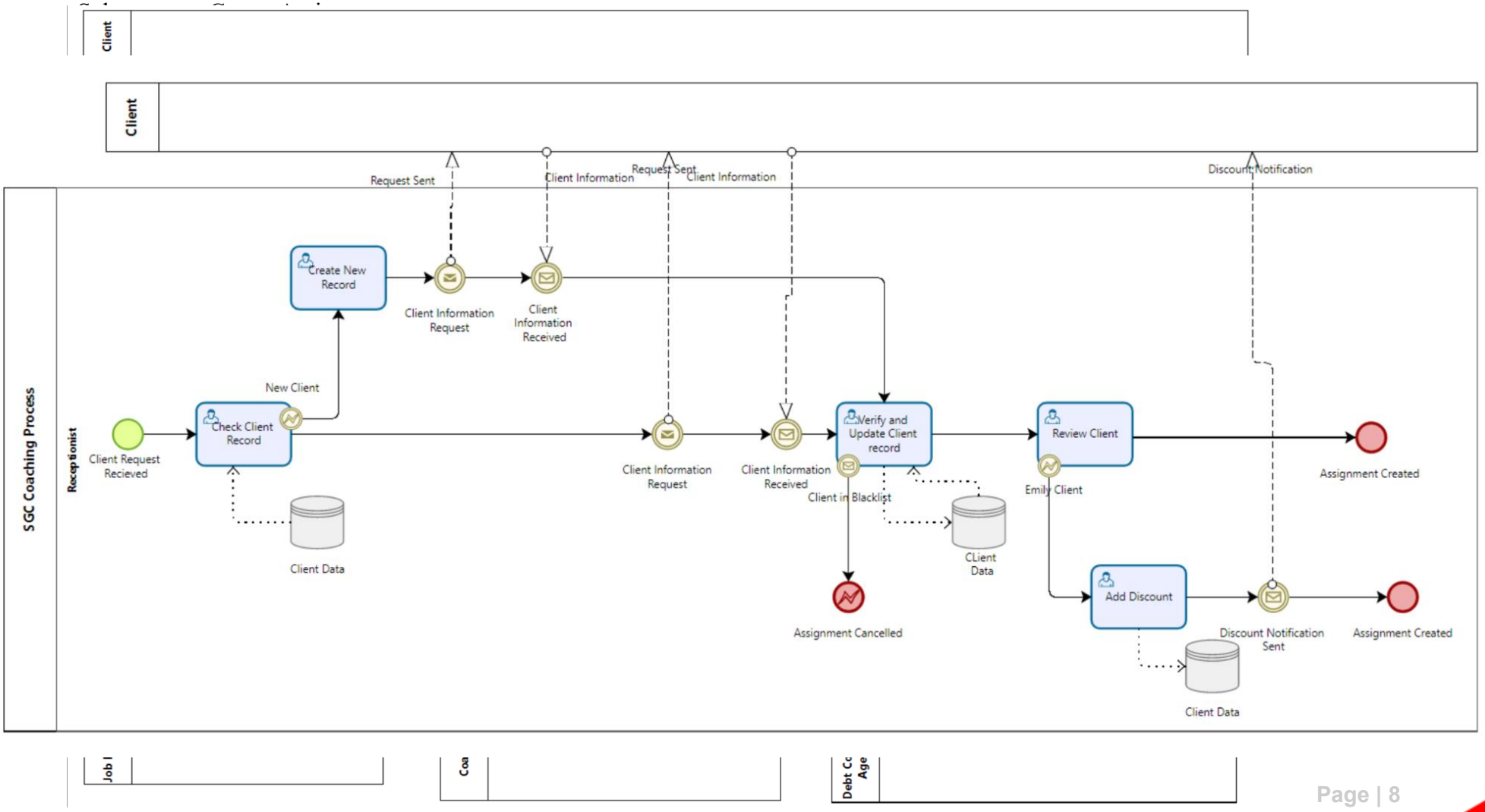

Sub-process: Recruit New Coach

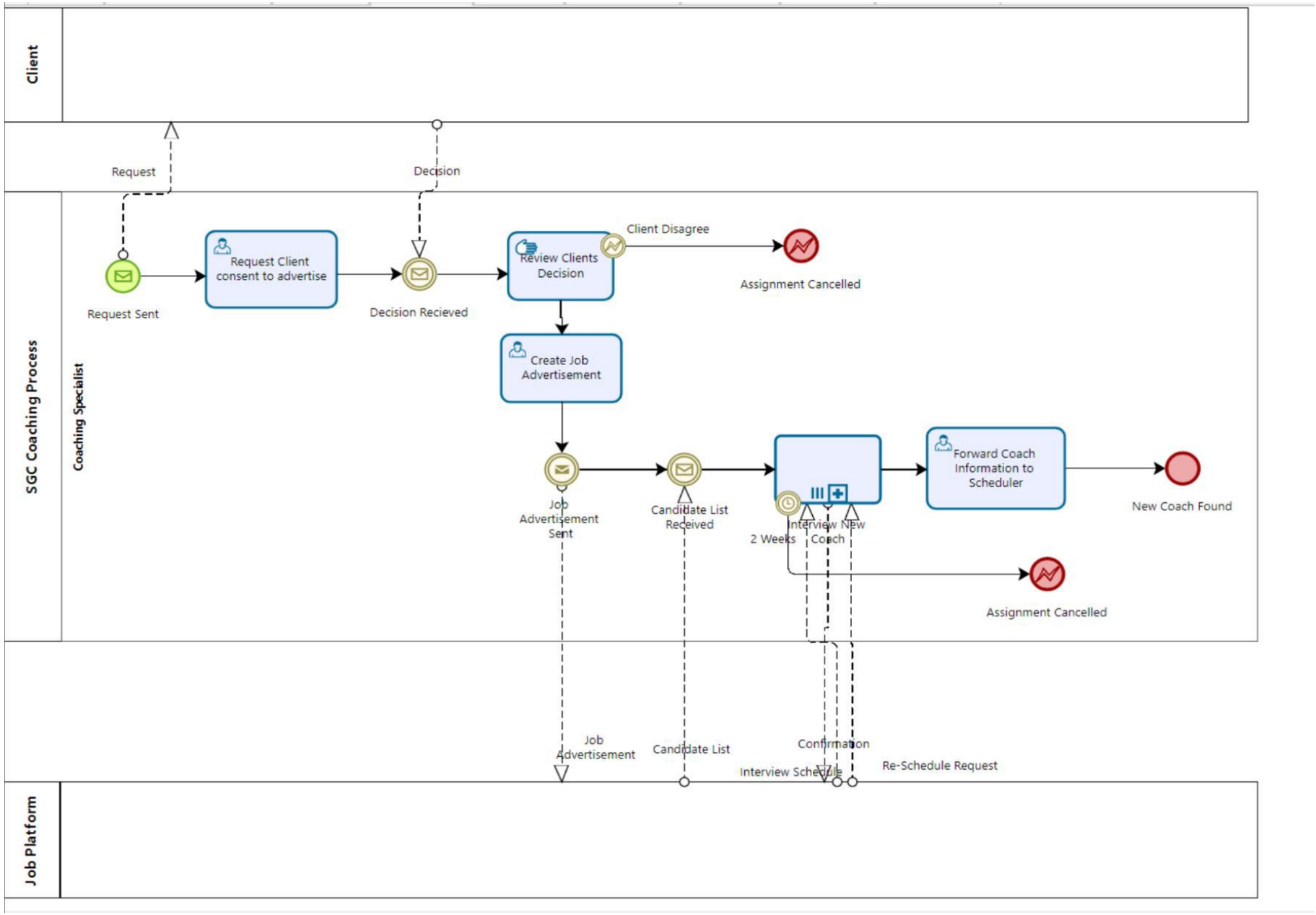

Sub-process: Find New Coach

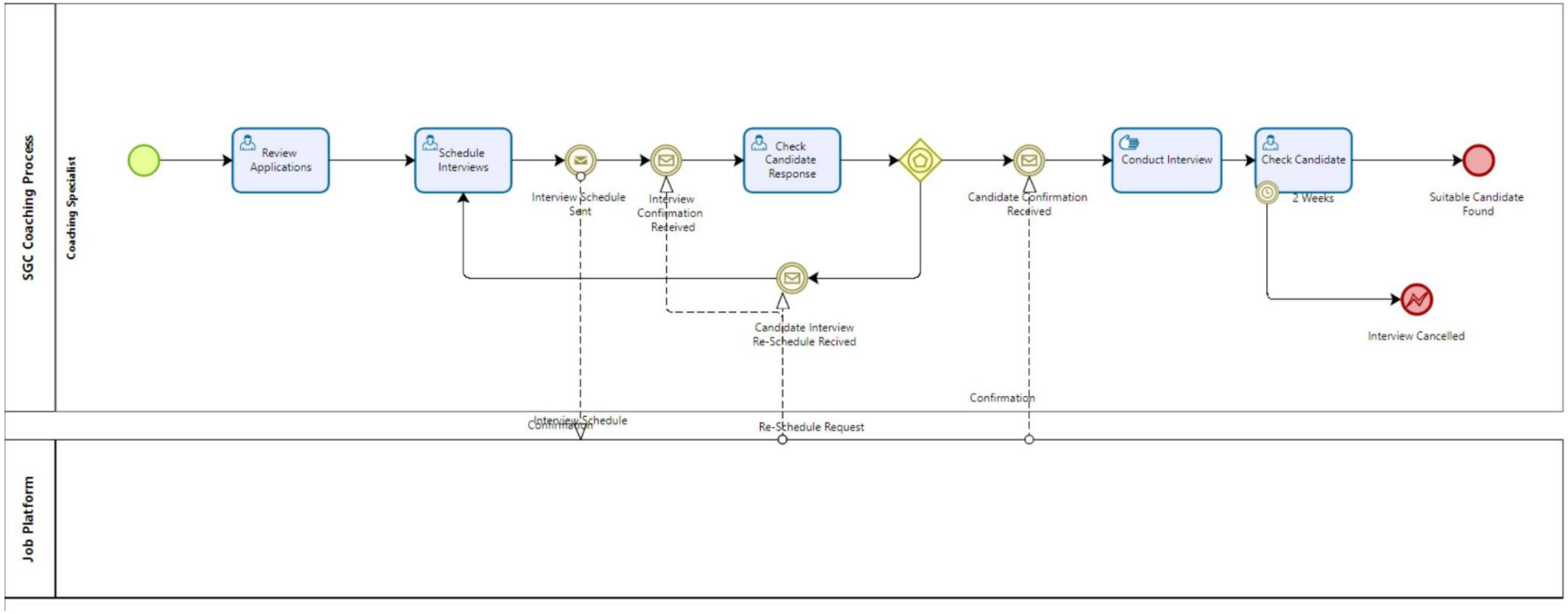

Sub-process: Schedule Assignment

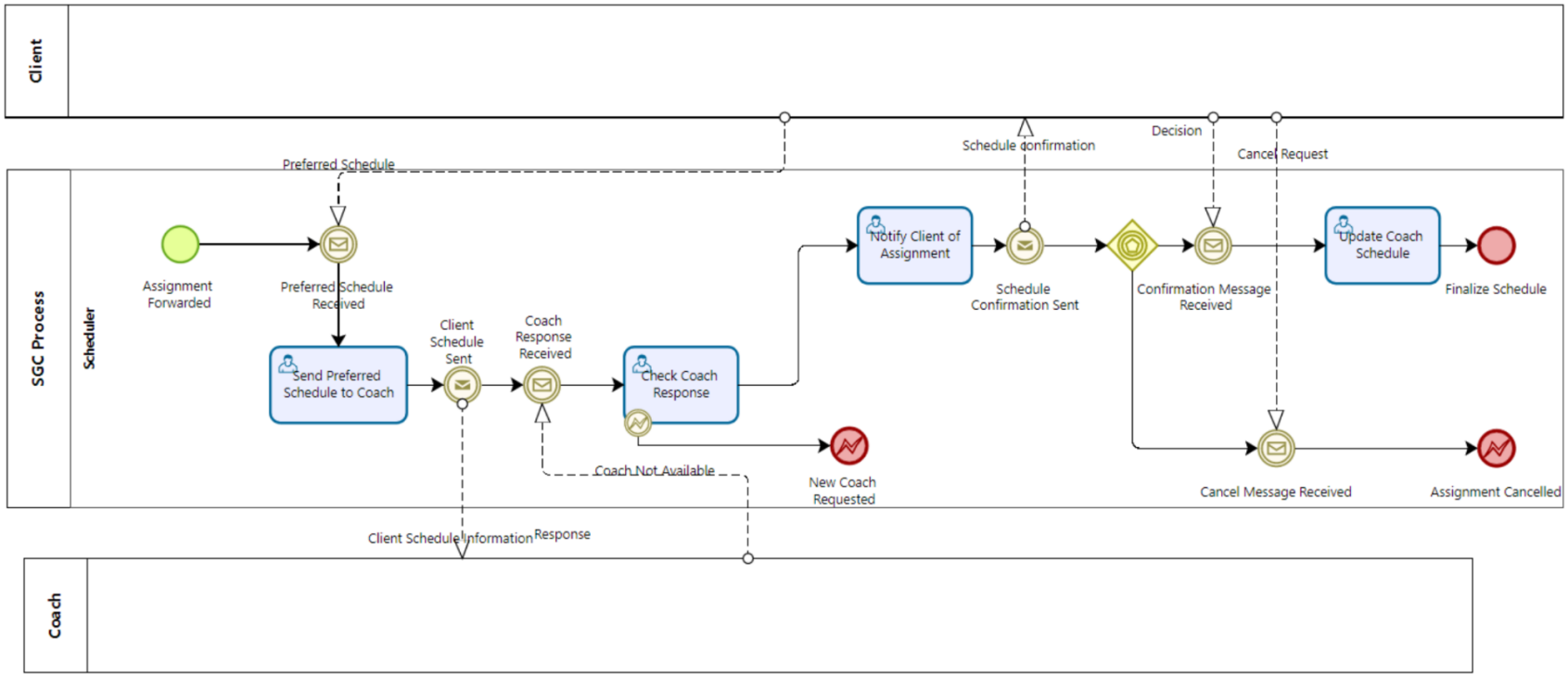

Sub-process: Verify Assignment

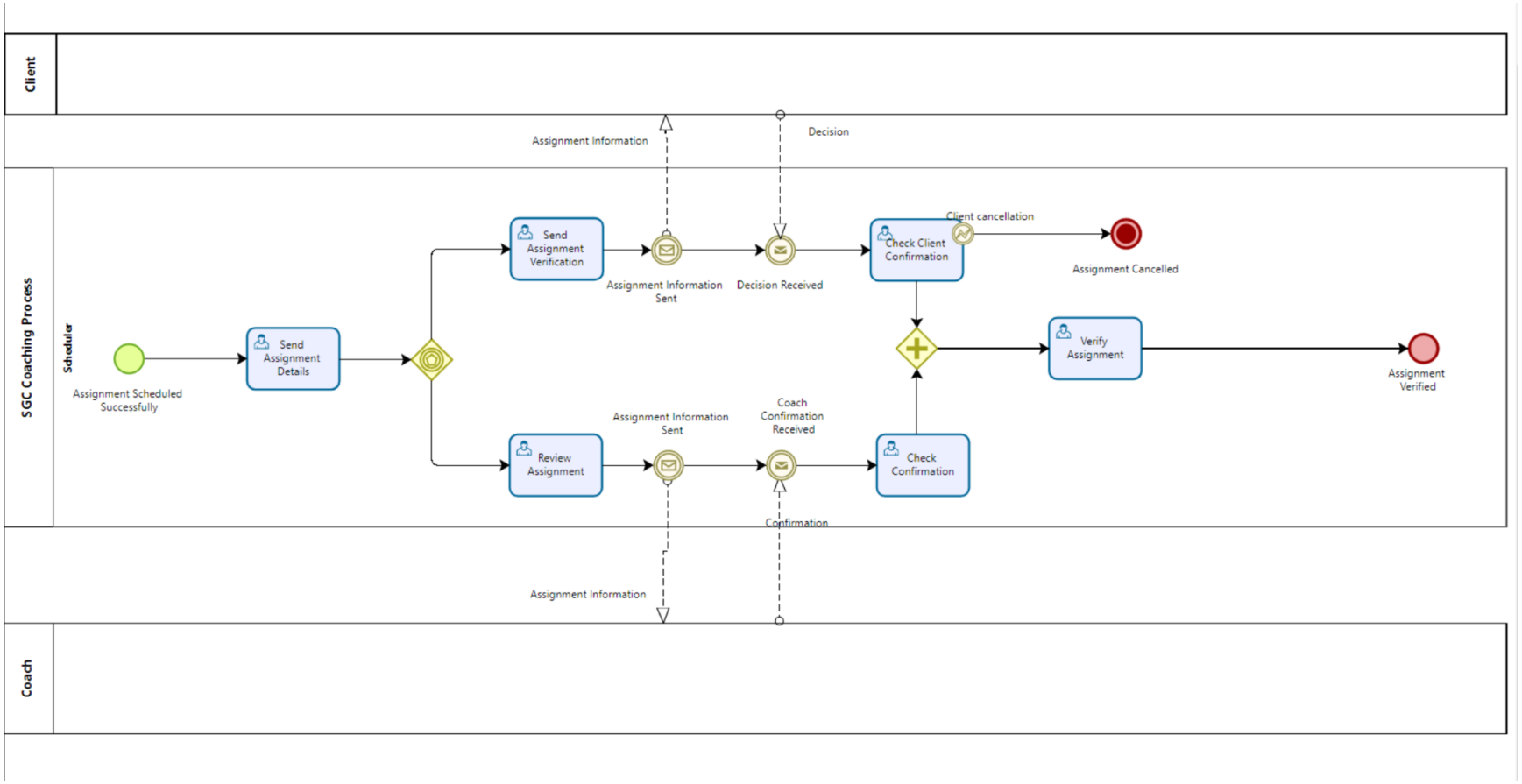

Sub-process: Collect Feedback

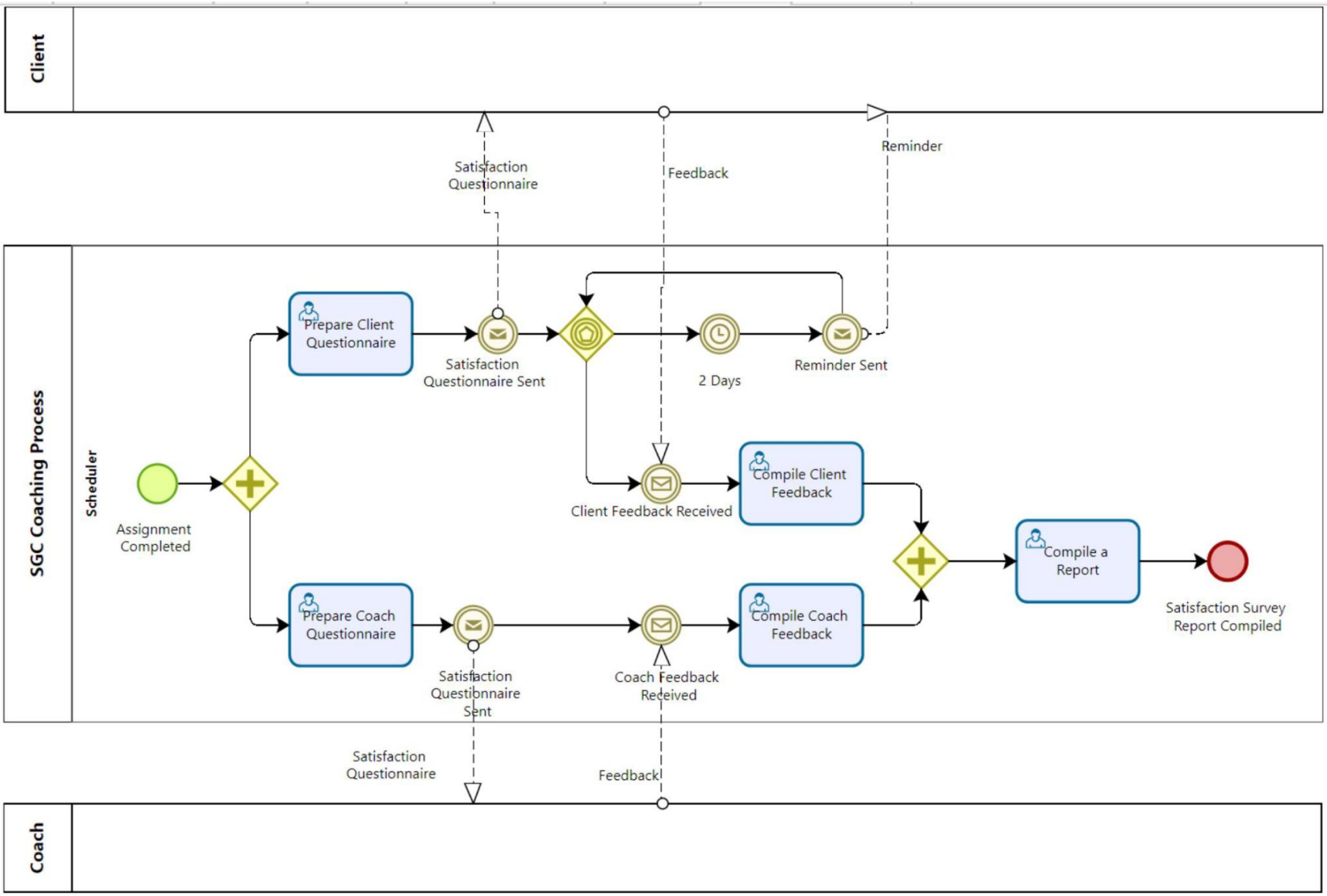

Sub-process: Process Client Payment

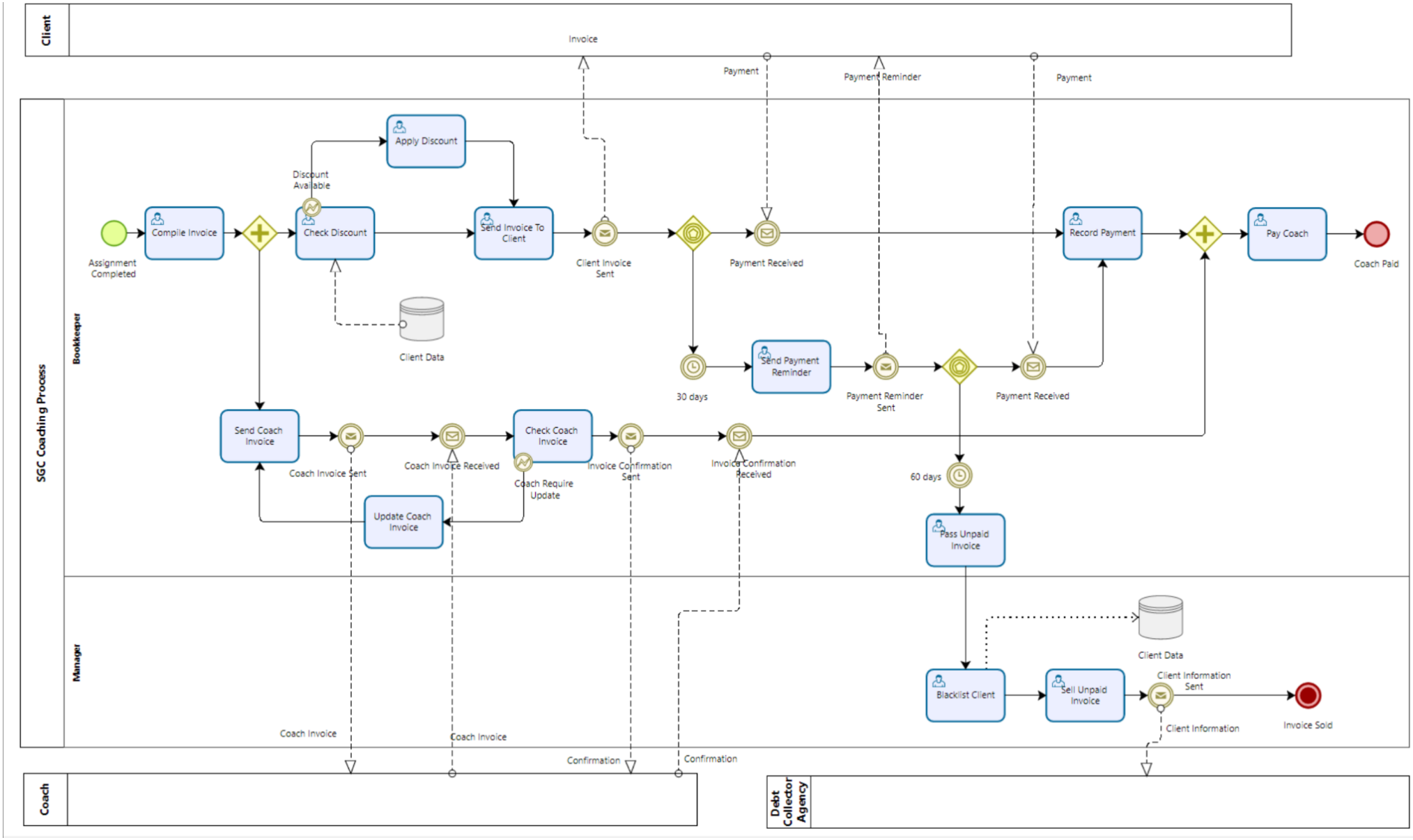

4.2. Level 2 TO-BE BPMN Diagrams

To-Be Process Design (Key Improvements)

The redesigned process introduces several structural changes to improve efficiency and reduce operational delays:

1. Digital Client Intake

Clients submit requests through an online form, capturing all required information upfront. This eliminates manual data entry and reduces back-and-forth communication with the receptionist.

2. Centralised Coach Availability

Coaches provide monthly availability schedules, enabling faster matching and reducing the need for repeated availability checks. This significantly improves scheduling efficiency.

3. Optimised Payment Workflow

Payment is moved earlier in the process, immediately after assignment confirmation. Automated reminders are triggered if payment is not received within defined timeframes, reducing delays and improving cash flow.

4. Automated Feedback Handling

Feedback collection is no longer a blocking step. Automated reminders are used, and the process can proceed without dependency on client responses, preventing unnecessary delays.

5. Exception Handling (Refund Process)

A structured escalation process is introduced for client complaints. Refund decisions are handled based on defined criteria, ensuring consistency and reducing manual intervention.

These changes eliminate rework loops, reduce manual workload, and create a more streamlined and scalable process.

Main Process:

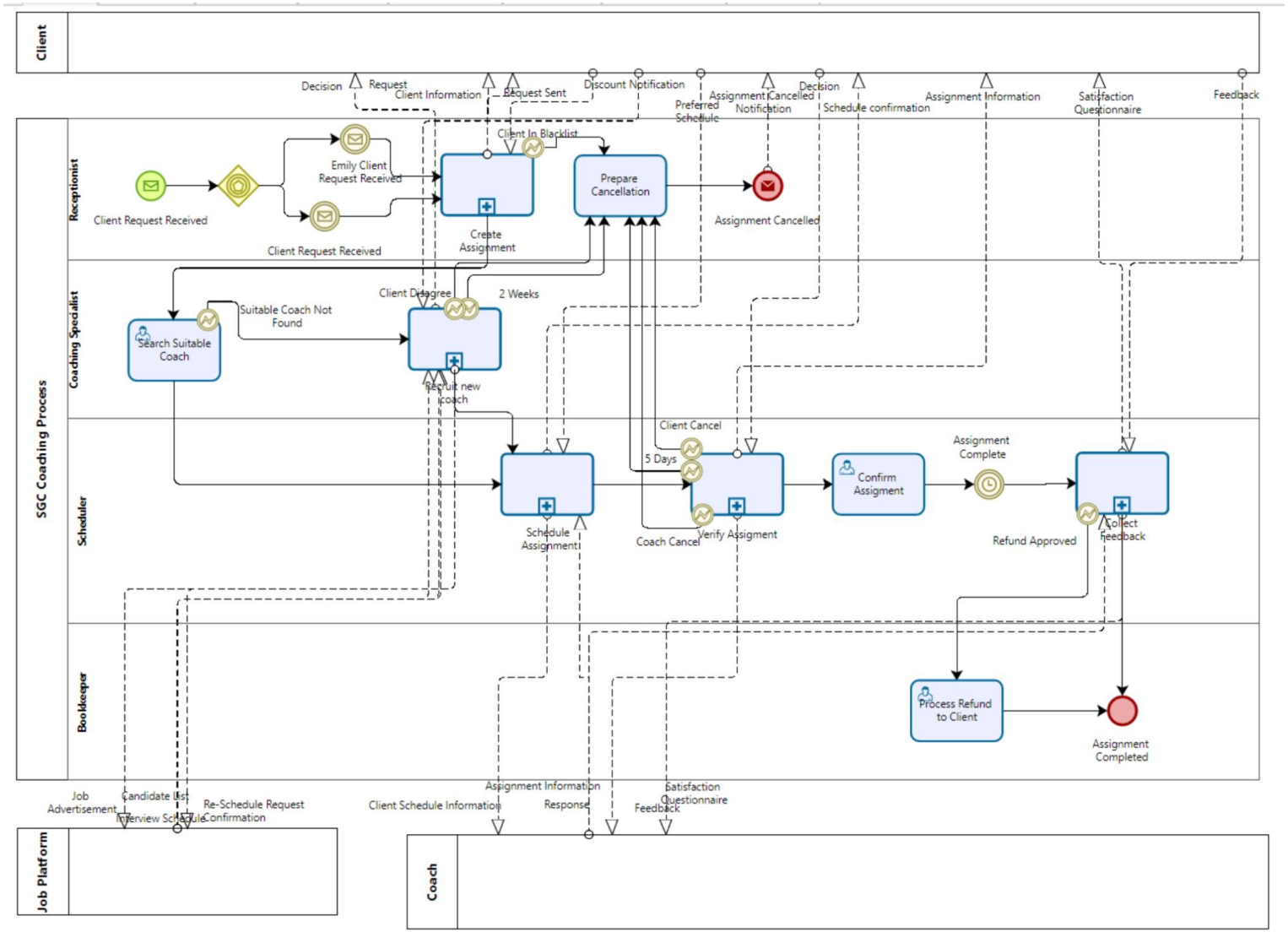

Sub-process: Create Assignment

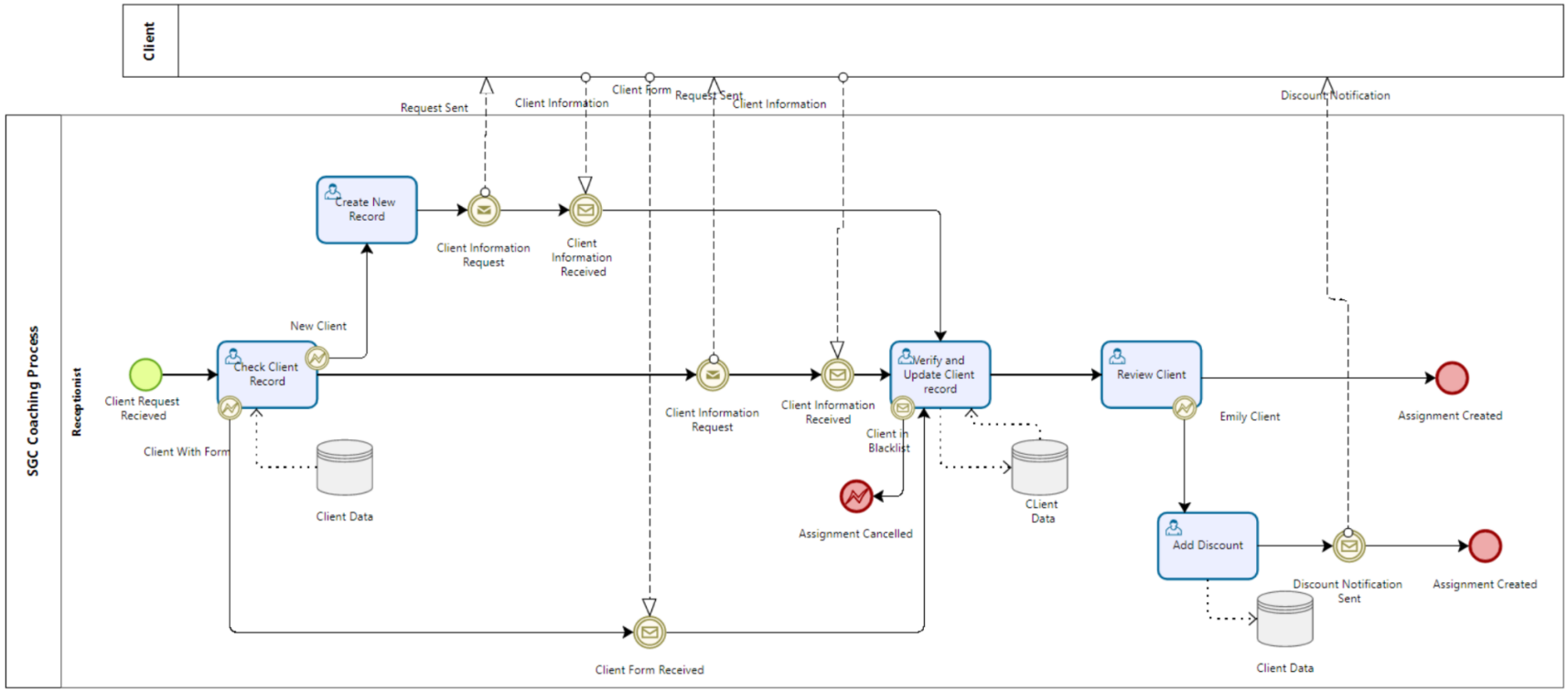

Sub-process: Recruit New Coach

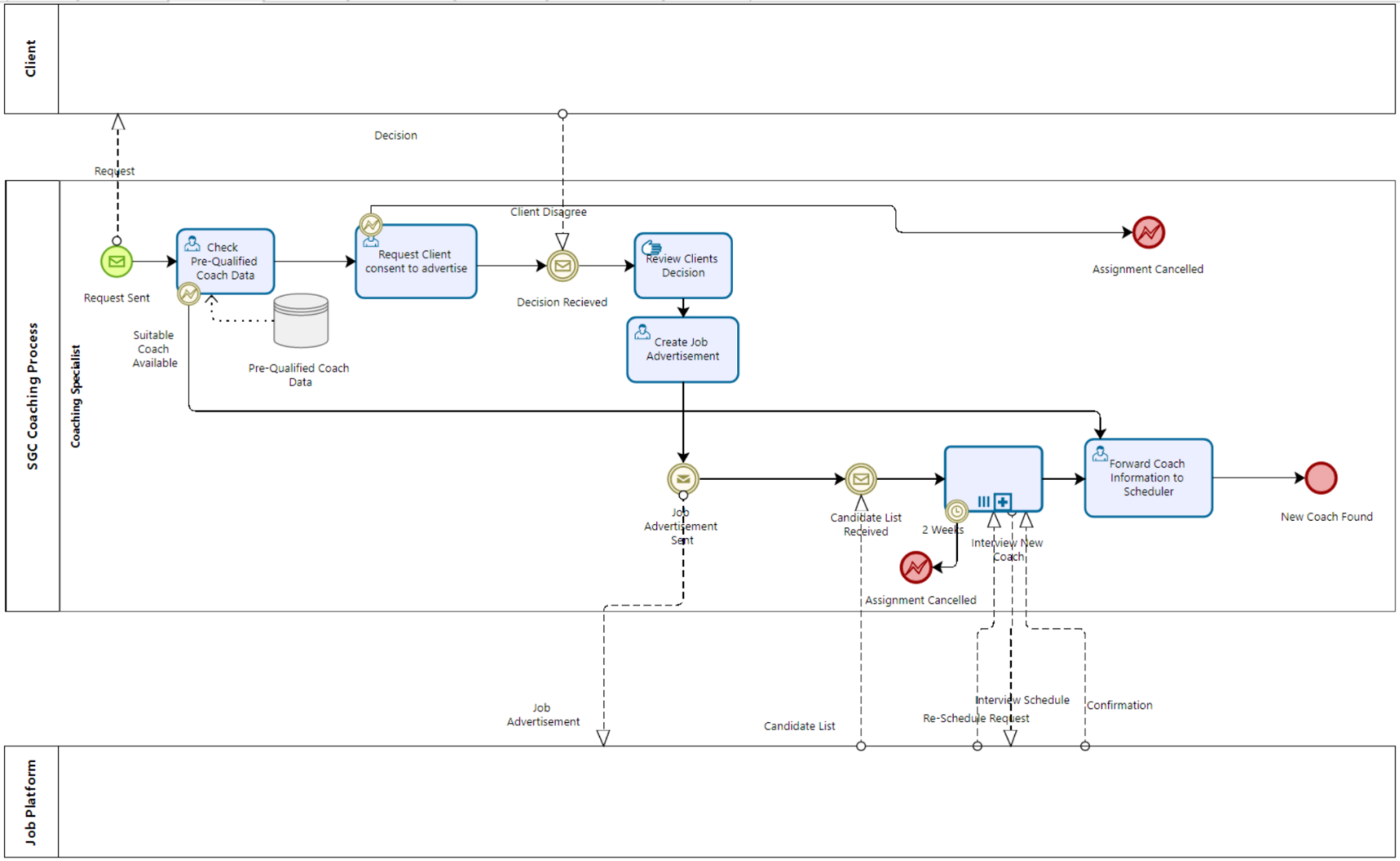

Sub-process: Find New Coach

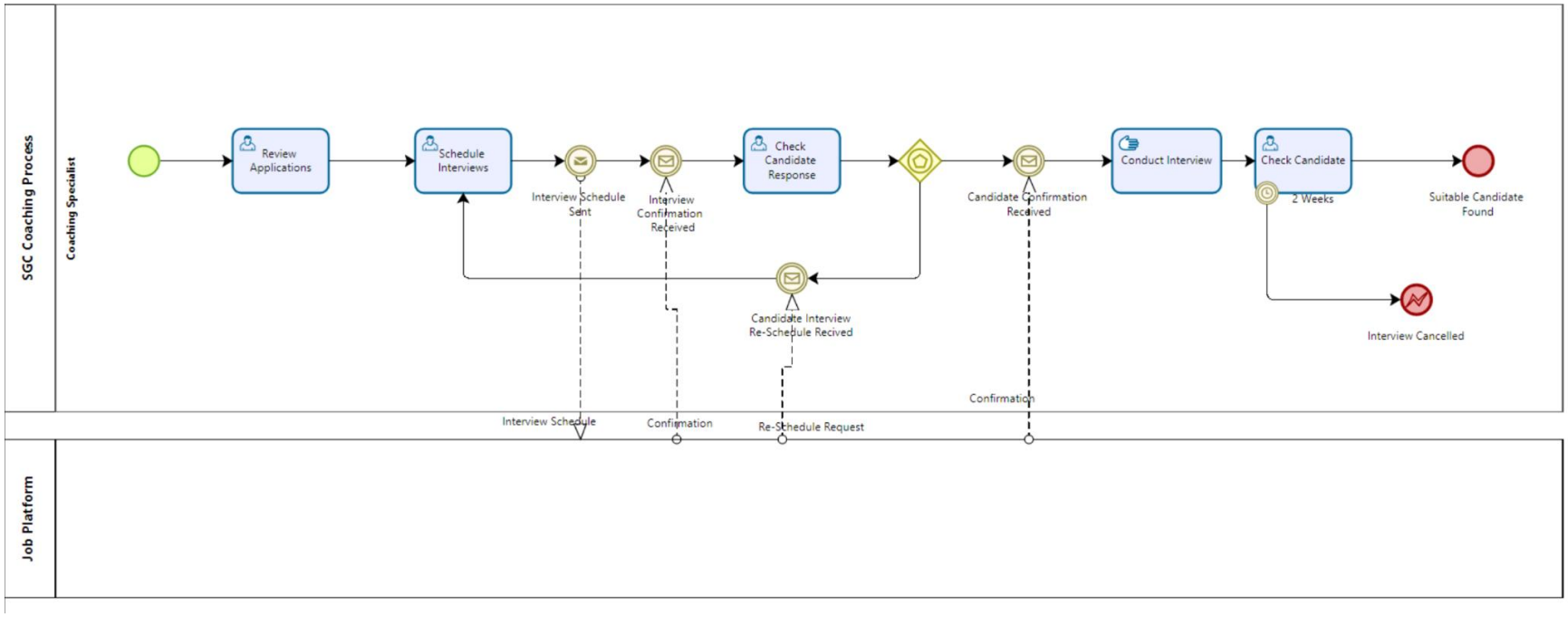
SGC Coaching Process
Coaching Specialist
Review Applications
Schedule Interviews
Interview Schedule Sent
Interview Confirmation Received
Check Candidate Response
Candidate Confirmation Received
Conduct Interview
Check Candidate
2 Weeks
Suitable Candidate Found
Interview Cancelled
Candidate Interview Re-Schedule Recived
Interview Schedule
Confirmation
Re-Schedule Request
Confirmation
Job Platform

Sub-process: Schedule Assignment

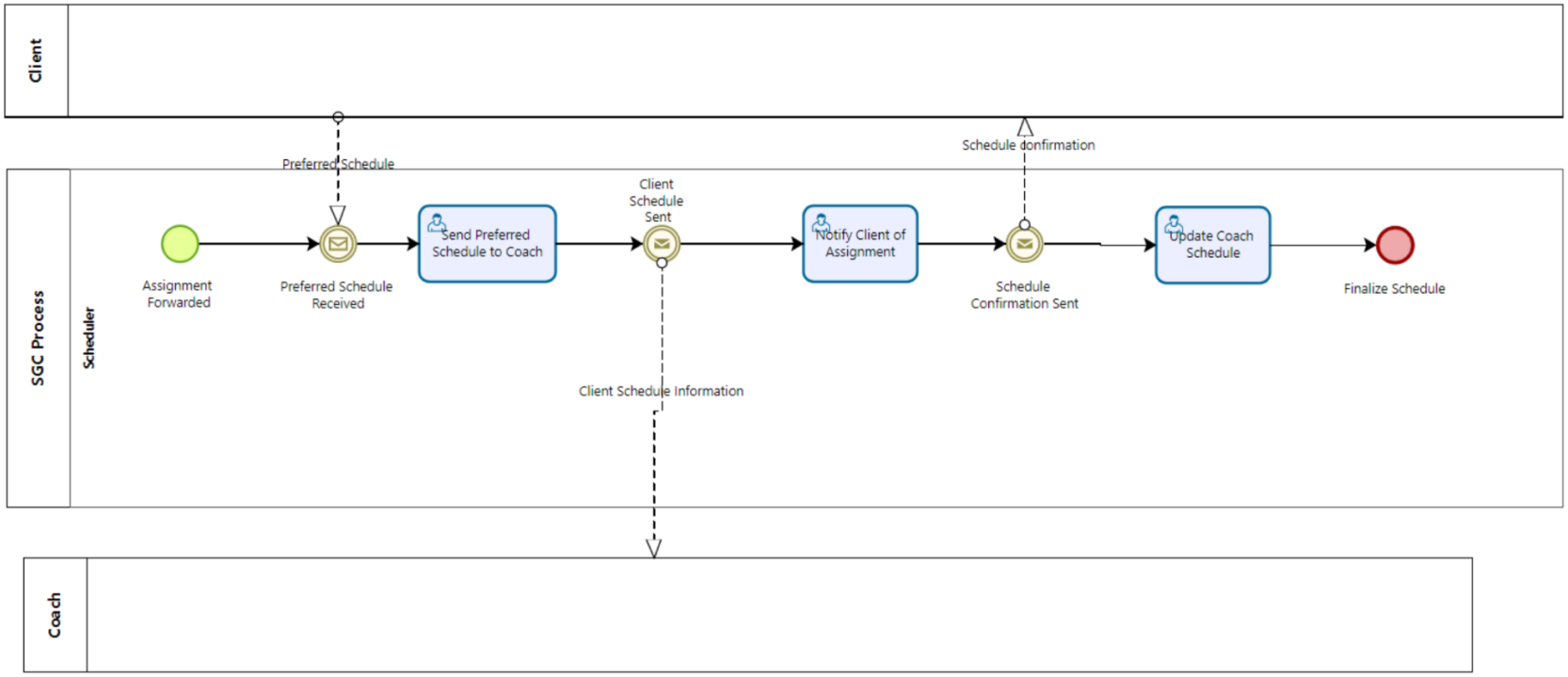

Sub-process: Verify Assignment

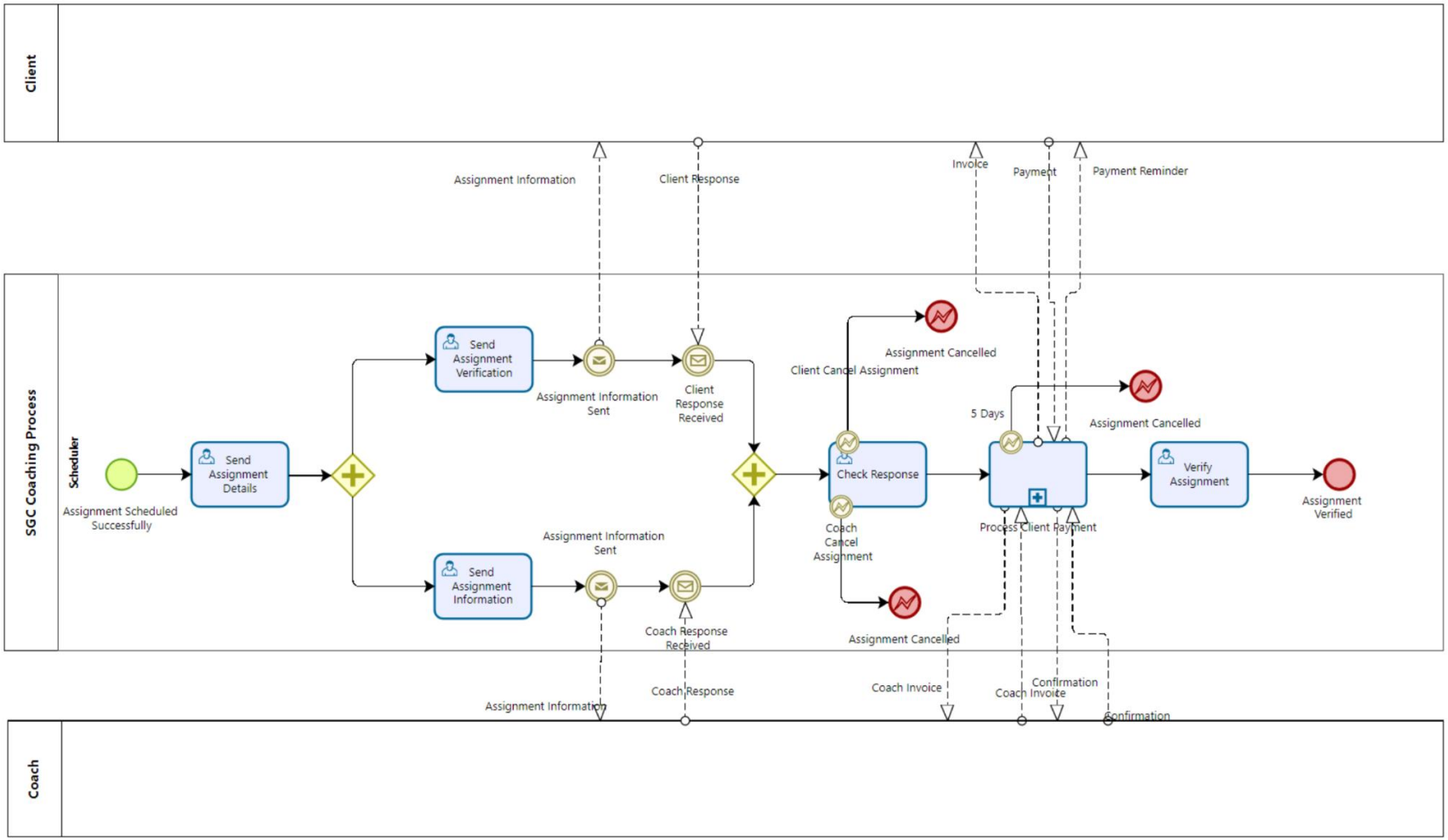

Sub-process: Process Client Payment

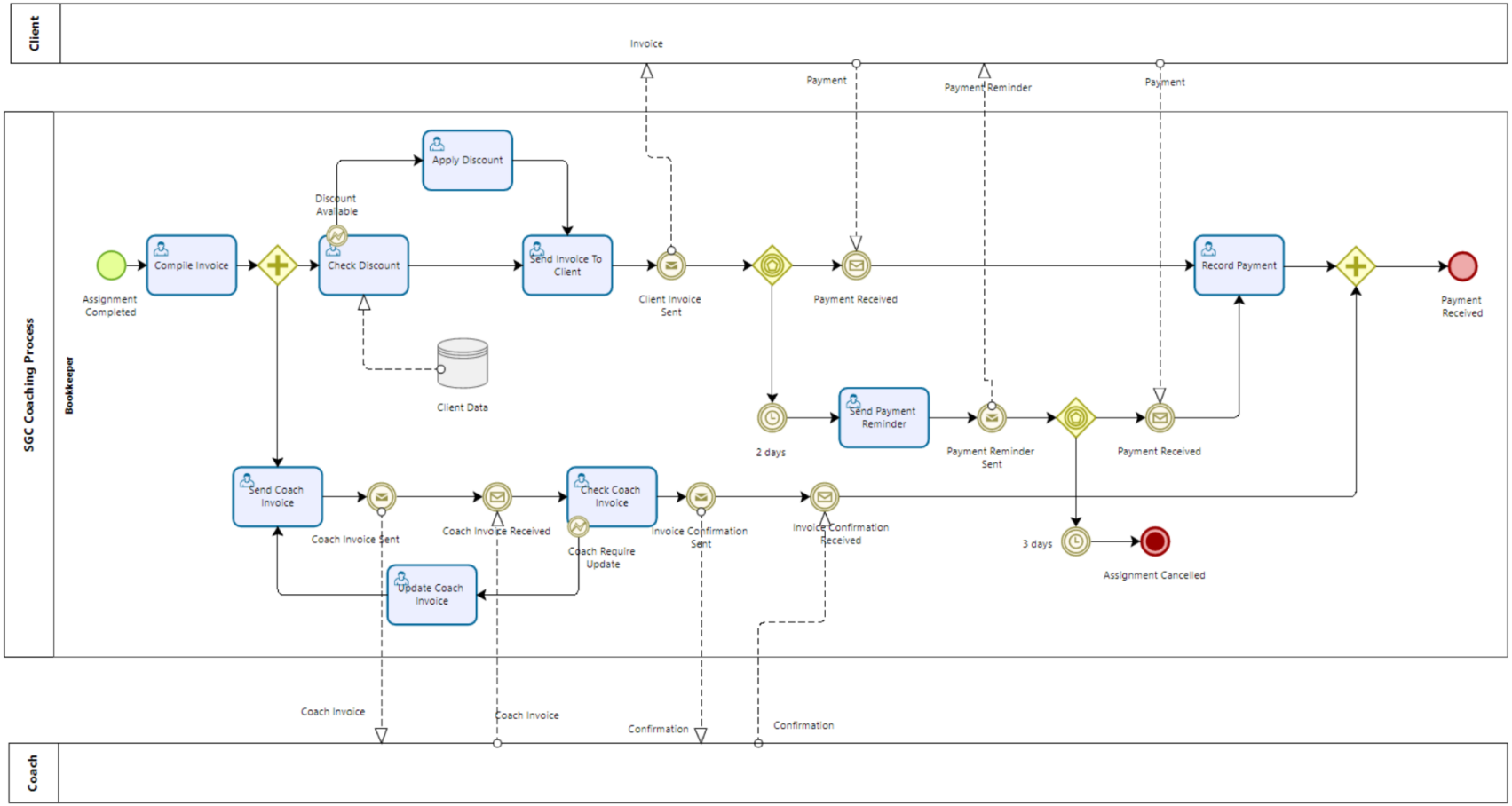

Sub-process: Collect Feedback

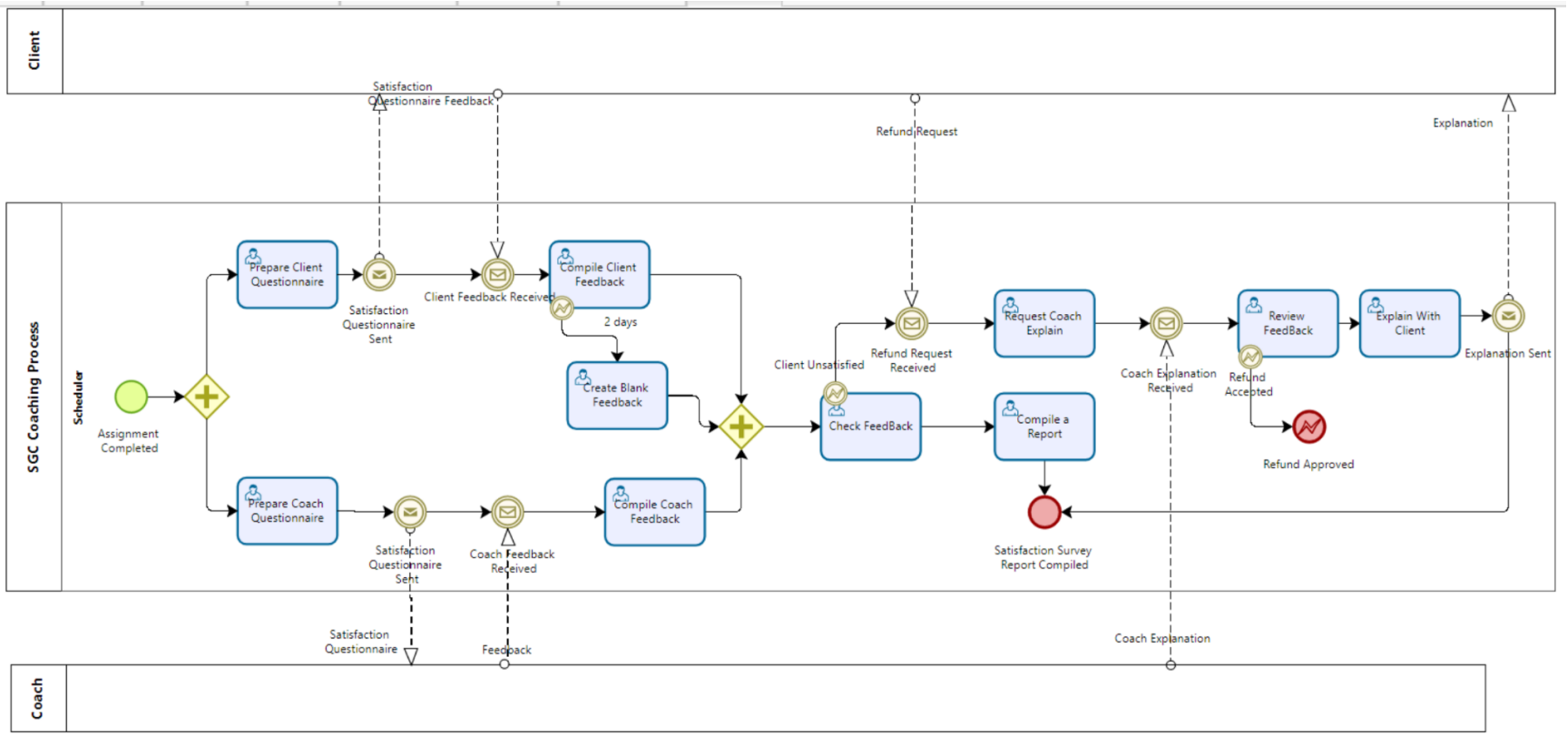

5. Logical Automation Design

Automation Design (BPMS Integration)
The automation model extends the redesigned process by introducing a Business Process Management System (BPMS) to execute and control key workflow steps.
Automated Process Activities

- Client record validation and creation based on submitted forms
- Detection and request of missing or incomplete information
- Automated application of discounts using predefined rules
- System-generated notifications for assignment updates and status changes

Reduced Manual Involvement
The receptionist and client interact with the system only when required, while the BPMS manages task execution, record updates, and exception handling. This removes dependency on manual coordination across roles.
Process Impact

- Eliminates manual data handling and repetitive administrative tasks
- Reduces processing delays caused by human intervention
- Improves data accuracy and consistency across the workflow
- Enables real-time tracking and control of assignment status

Compared to the To-Be process, this automated model further increases efficiency by enforcing process standardisation and minimising variability in execution.

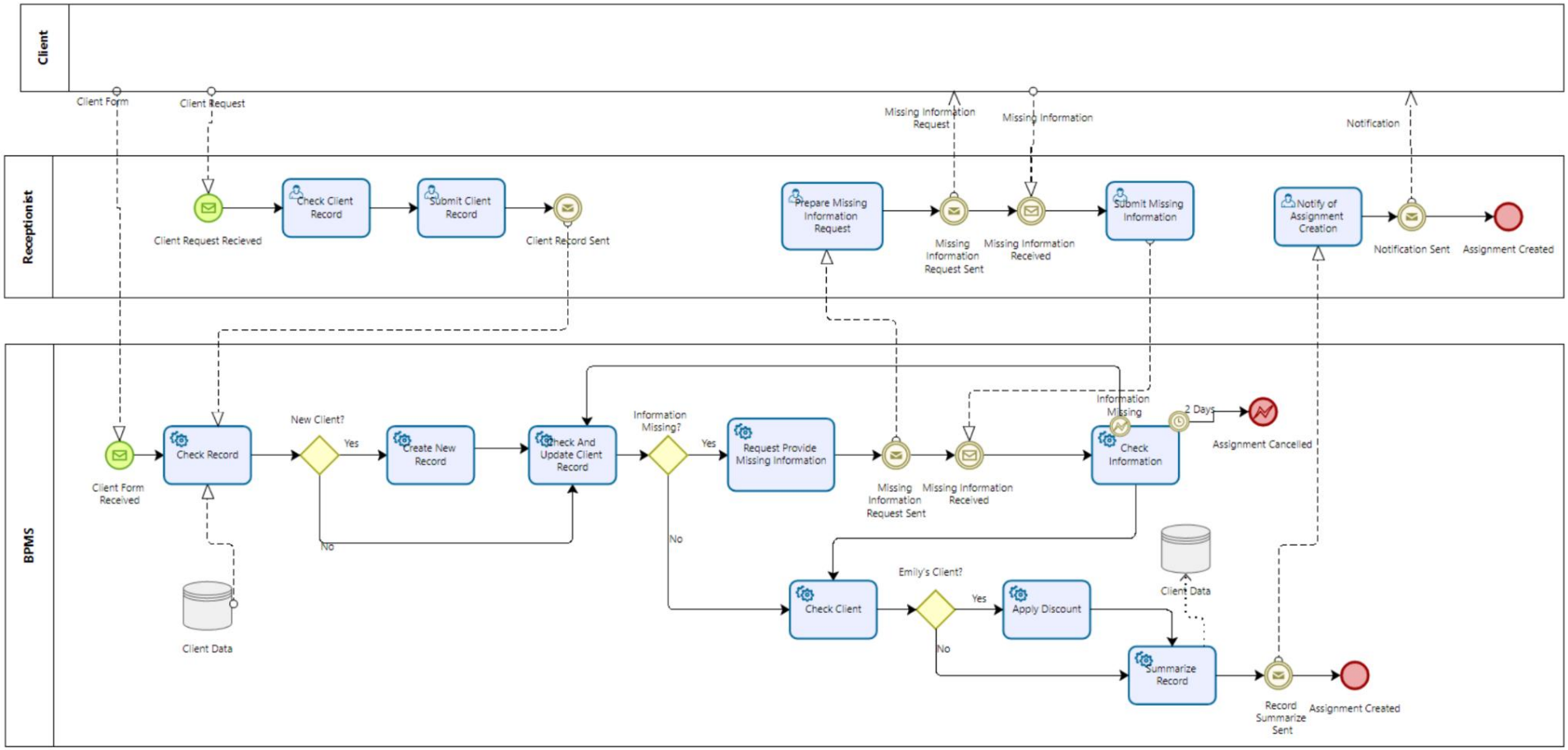
Client
Client Form
Client Request
Missing Information Request
Missing Information
Notification
Receptionist
Client Request Recieved
Check Client Record
Submit Client Record
Client Record Sent
Prepare Missing Information Request
Missing Information Request Sent
Missing Information Received
Submit Missing Information
Notify of Assignment Creation
Notification Sent
Assignment Created
BPMS
Client Form Received
Check Record
New Client?
Yes
No
Create New Record
Check And Update Client Record
Information Missing?
Yes
No
Request Provide Missing Information
Missing Information Request Sent
Missing Information Received
Information Missing
2 Days
Check Information
Assignment Cancelled
Client Data
Check Client
Emily's Client?
Yes
No
Apply Discount
Client Data
Summarize Record
Record Summarize Sent
Assignment Created

6. Conclusion

The analysis of SGC's coaching operations identified key inefficiencies, including manual data handling, scheduling delays, and process dependencies that slowed overall service delivery.

The redesigned process addresses these issues by introducing digital client intake, structured scheduling, earlier payment processing, and automated workflow support. These changes eliminate unnecessary handoffs, reduce rework loops, and improve process flow.

The addition of BPMS-based automation further enhances the solution by standardising execution, reducing manual effort, and enabling real-time process control.

Overall, the redesigned process delivers faster assignment completion, improved operational efficiency, and a more scalable foundation for future growth.

Appendix

Appendix i: Best Practices Table

Name	Issue	Best Practice	TO-BE Solution	Advantages	Disadvantages
Client Sends Form to Pick Coach	The current process involves collecting information from the client manually. Allowing the client to fill out and send the form directly can improve accuracy and reduce manual data entry.	- Control Relocation - Contact Reduction - Synchronous/asynchronous communication	Client fills out the form online and submits it. Coaching specialist can immediately begin finding a coach based on the information.	Reduces time spent on input validation, faster coach matching, improved accuracy.	Clients may require guidance in filling out forms properly, increasing support queries.

Name	Issue	Best Practice	TO-BE Solution	Advantages	Disadvantages
Client Pays for Assignment After Verification	Payment is currently delayed and involves waiting for invoices and follow-ups. Making payment directly after verification will streamline the payment process.	- Activity Elimination - Prioritisation - Re-sequencing	Payment is processed immediately after the client confirms the assignment. No need for blacklist management.	Improved cash flow, reduced administrative burden in following up on unpaid invoices, no need for blacklist.	Some clients may resist paying upfront before the service is delivered.

Name	Issue	Best Practice	TO-BE Solution	Advantages	Disadvantages
Fix the Loop in Collecting Feedback	There is a feedback collection loop, with reminders sent manually if feedback is not received. Automating feedback reminders can eliminate the loop.	- Activity Elimination	Feedback reminders are automated. The system automatically sends out feedback requests and reminders after an assignment is complete.	Reduced manual intervention, faster feedback collection, improved efficiency.	Automated reminders may be ignored by some clients, requiring additional manual follow-up.

Name	Issue	Best Practice	TO-BE Solution	Advantages	Disadvantages
Coach Submits Monthly Schedule	The current process involves checking coach availability for each assignment, which slows down scheduling. Instead, coaches can submit their availability on a monthly basis.	- Activity Elimination - Knockout - Outsourcing	Build and maintain a pre-qualified coach pool where coaches are vetted and onboarded ahead of time based on various skill sets, availability, and experience. Instead of advertising for each new assignment, pre-select coaches during an initial onboarding process, and update their profiles regularly (monthly or quarterly).	Faster scheduling process, more efficient use of coach time, reduced administrative effort. This eliminates the need to advertise for every individual assignment and saves time. It also ensures that coaches are readily available, reducing client wait times.	Monthly schedules may not account for last-minute changes in availability. Requires regular maintenance of the coach database to ensure information is up to date.